C46535-2006

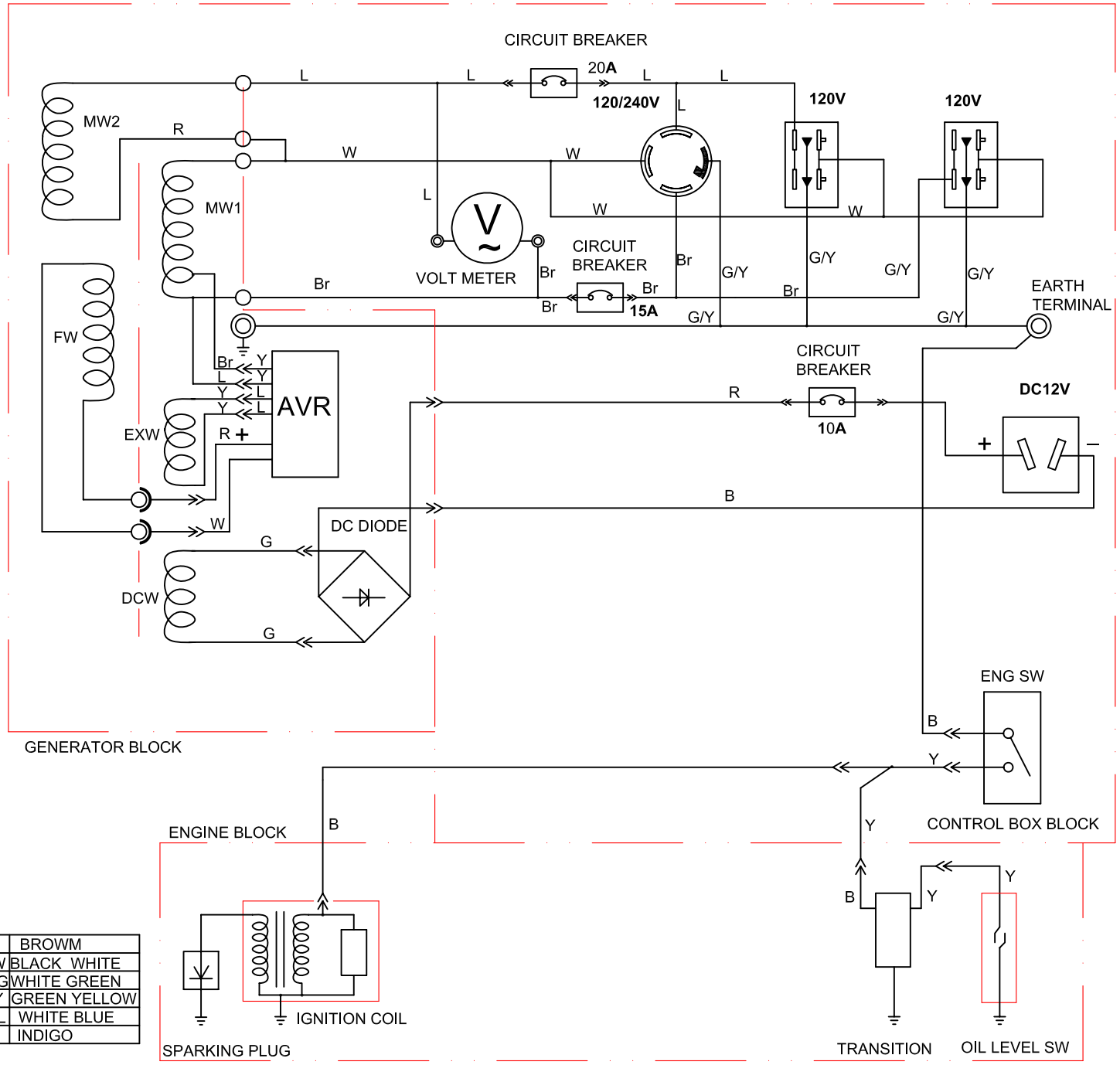

B	BLACK	Br	BROWM
Y	YELLOW	B/W	BLACK WHITE
L	BLUE	W/G	WHITE GREEN
G	GREEN	G/Y	GREEN YELLOW
R	RED	W/L	WHITE BLUE
W	WHITE	In	INDIGO